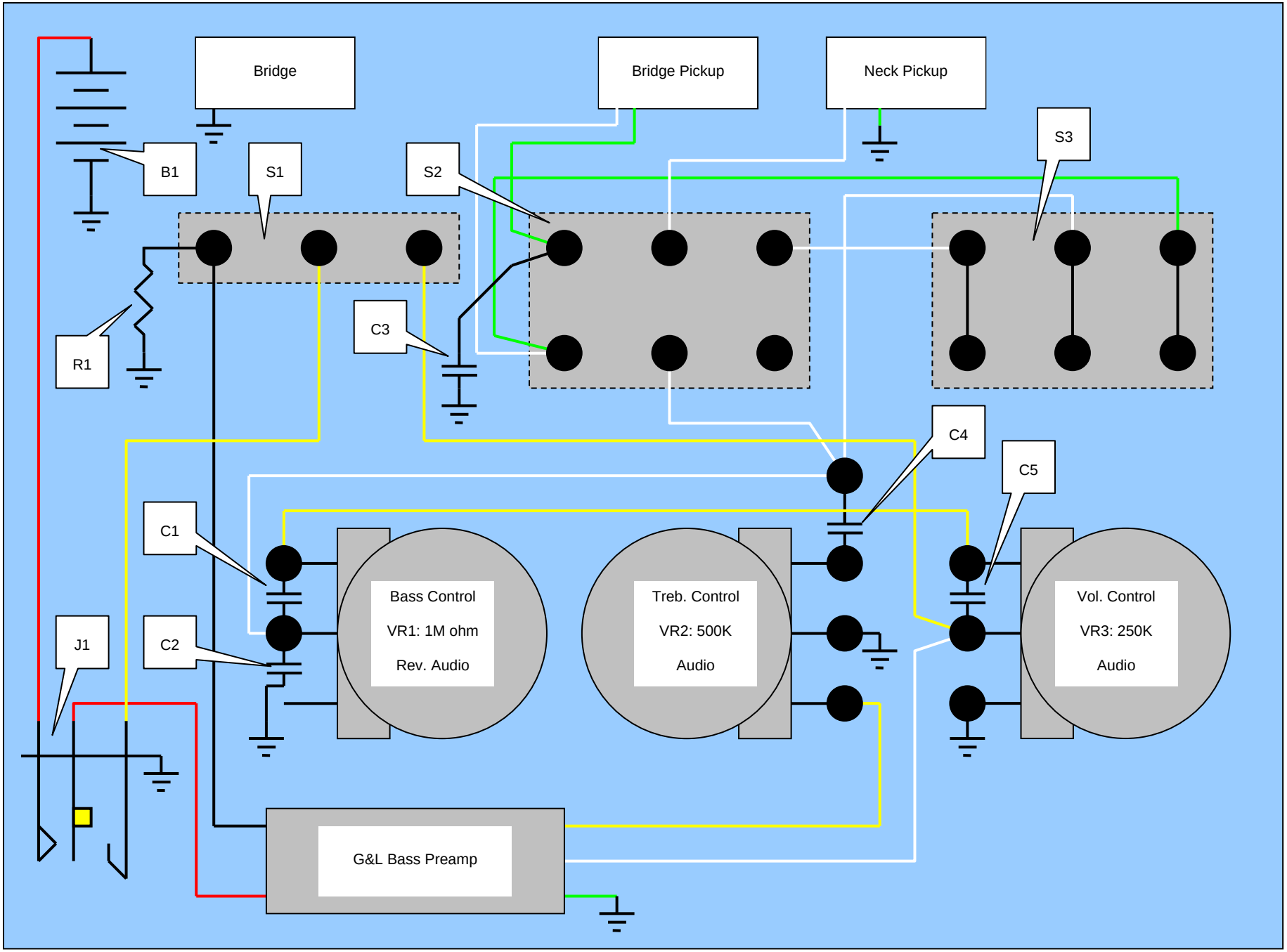
Bridge
Bridge Pickup
Neck Pickup
B1
S1
S2
S3
R1
C3
C4
C5
C1
C2
J1
Bass Control
VR1: 1M ohm
Rev. Audio
Treb. Control
VR2: 500K
Audio
Vol. Control
VR3: 250K
Audio
G&L Bass Preamp